REASSEMBLY

1. **INSPECT SYNCHRONIZER RING NO. 3 (See page MX-47)**
2. **INSPECT TRANSMISSION HUB SLEEVE NO. 3 (See page MX-48)**
3. **INSPECT 5TH GEAR (See page MX-48)**
4. **INSPECT REVERSE IDLER GEAR SUB-ASSEMBLY (See page MX-49)**
5. **INSTALL OUTPUT SHAFT (MTM) COVER**
   (a) Coat the output shaft (MTM) cover with MP grease, and install it to the transaxle case.
   NOTICE:
   Fit the output shaft (MTM) cover projection into the case side hollow.

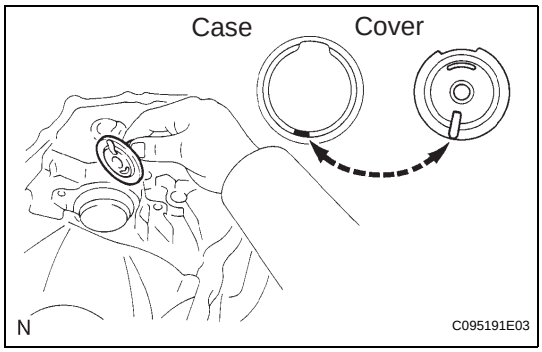

6. **INSTALL OUTPUT SHAFT FRONT BEARING**
   (a) Coat a new output shaft front bearing with gear oil, and using SST and a press, install it to the transaxle case.
   SST 09950-60010 (09951-00550), 09950-70010 (09951-07150)
   NOTICE:
   - **Be sure to install a new bearing in the correct direction, as shown in the illustration.**
   - **When replacing the output shaft front bearing, replace the output shaft front bearing inner race along with it.**

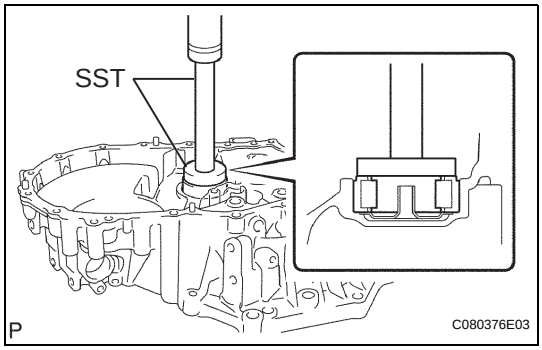

7. **INSTALL FRONT TRANSAXLE CASE OIL SEAL**
   (a) Using SST and a hammer, install a new front transaxle case oil seal to the transaxle case.
   SST 09950-60010 (09951-00370), 09950-70010 (09951-07150)
   Drive in depth:
   15.6 to 16.0 mm (0.6142 to 0.6299 in.)
   (b) Coat the lip of the front transaxle case oil seal with MP grease.

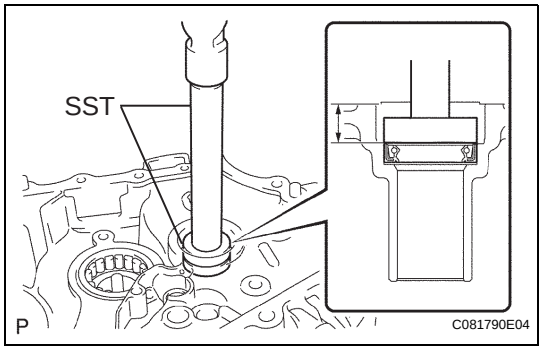

MX

cardiagn.com

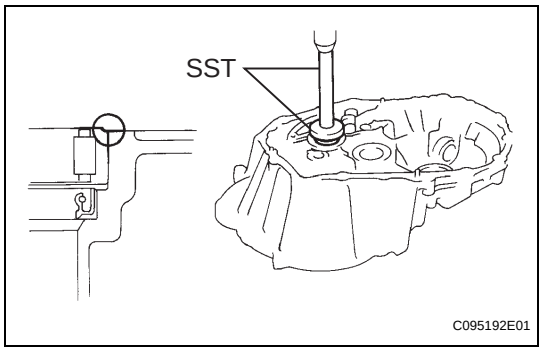

8. INSTALL INPUT SHAFT FRONT BEARING

(a) Coat a new input shaft front bearing with gear oil, and using SST and a press, install it to the transaxle case.

SST 09950-60010 (09951-00420), 09950-70010 (09951-07150)

Drive in depth:
0 to 0.3 mm (0 to 0.012 in.)

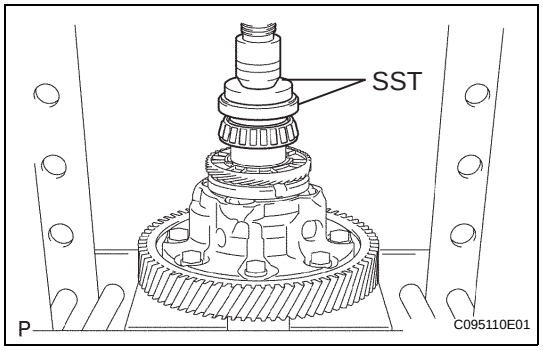

9. INSTALL FR DIFFERENTIAL CASE FRONT TAPERED ROLLER BEARING

(a) Using SST and a press, install a new FR differential case front tapered roller bearing (inner race) to the front differential case.

SST 09350-32014 (09351-32120), 09950-60010 (09951-00530)

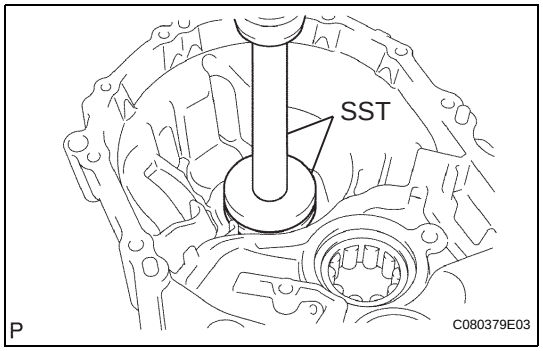

(b) Using SST and a press, install a new FR differential case front tapered roller bearing (outer race) with the shim to the transaxle case.

SST 09950-60020 (09951-00680), 09950-70010 (09951-07150)

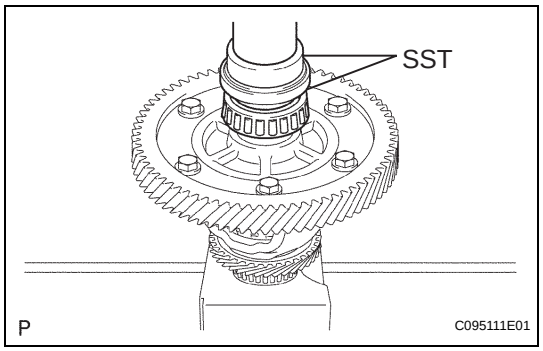

10. INSTALL FR DIFFERENTIAL CASE REAR TAPERED ROLLER BEARING

(a) Using SST and a press, install a new FR differential case rear tapered roller bearing (inner race) to the front differential case.

SST 09350-32014 (09351-32120), 09950-60010 (09951-00530)

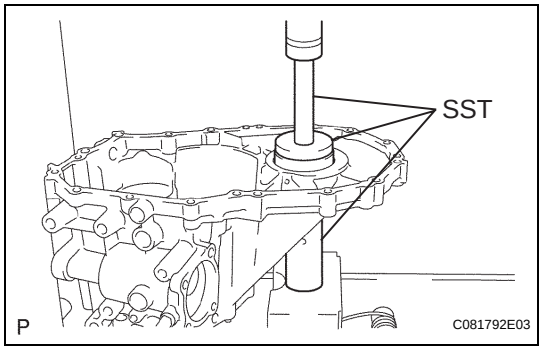

(b) Using SST and a press, install a new FR differential case rear tapered roller bearing (outer race) with the shim to the manual transmission case.

SST 09309-36010, 09950-60020 (09951-00710), 09950-70010 (09951-07150)

cardiagn.com

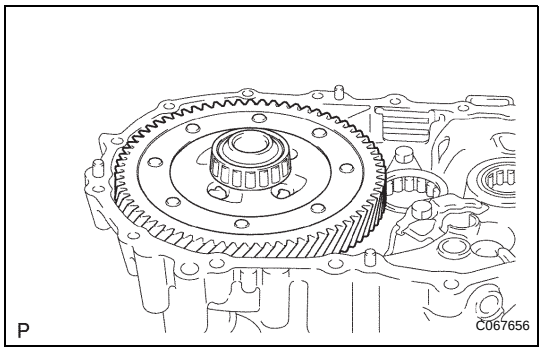

11. ADJUST DIFFERENTIAL SIDE BEARING PRELOAD

(a) Coat the differential case assembly with gear oil, and install it to the transaxle case.

(b) Install the manual transmission case with the 16 bolts.
Torque: 29 N*m (300 kgf*cm, 22 ft.*lbf)

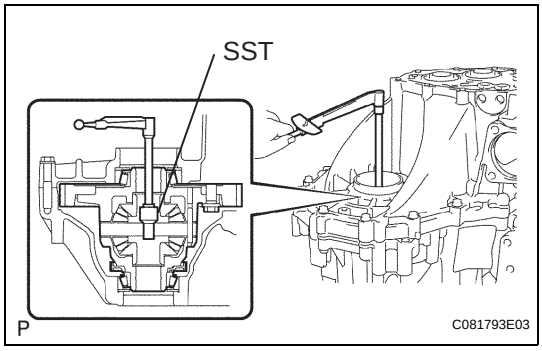

(c) Using SST and a torque wrench, turn the differential case assembly to the right and left 2 or 3 times to allow the bearings to settle.
SST 09564-32011

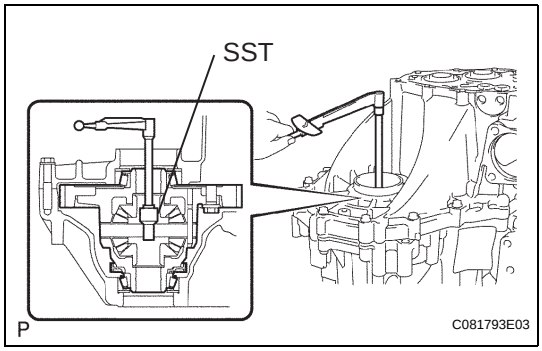

(d) Using SST and a torque wrench, measure the preload.
SST 09564-32011
Torque: New bearing preload (at starting)
0.78 to 1.57 N*m (8 to 16 kgf*cm, 6.9 to 13.9 in.*lbf)
If the preload is out of specification, select another shim.
Shim thickness

Mark	Thickness: mm (in.)	Mark	Thickness: mm (in.)
AA	2.10 (0.0827)	LL	2.60 (0.1024)
BB	2.15 (0.0846)	MM	2.65 (0.1043)
CC	2.20 (0.0866)	NN	2.70 (0.1063)
DD	2.25 (0.0886)	PP	2.75 (0.1083)
EE	2.30 (0.0906)	QQ	2.80 (0.1102)
FF	2.35 (0.0925)	RR	2.85 (0.1122)
GG	2.40 (0.0945)	SS	2.90 (0.1142)
HH	2.45 (0.0965)	TT	2.95 (0.1161)
JJ	2.50 (0.0984)	UU	3.00 (0.1181)
KK	2.55 (0.1004)	-	-

HINT:
The preload will change by about 0.3 to 0.4 N*m (3 to 4 kgf*cm, 2.6 to 3.5 in.*lbf) corresponding to a change of 0.05 mm (0.0020 in.) in shim thickness.

(e) Remove the 16 bolts and manual transmission case from the transaxle case.

(f) Remove the differential case assembly from the transaxle case.

cardiagn.com

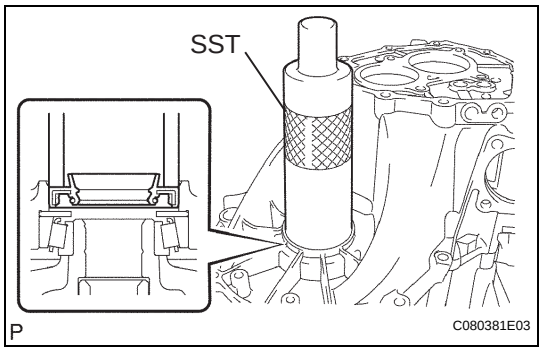

12. INSTALL TRANSMISSION CASE OIL SEAL

(a) Using SST and a hammer, install a new transmission case oil seal to the manual transmission case.
SST 09316-60011 (09316-00011)
Drive in depth:
9.6 to 10.2 mm (0.378 to 0.402 in.)

(b) Coat the lip of the transmission case oil seal with MP grease.

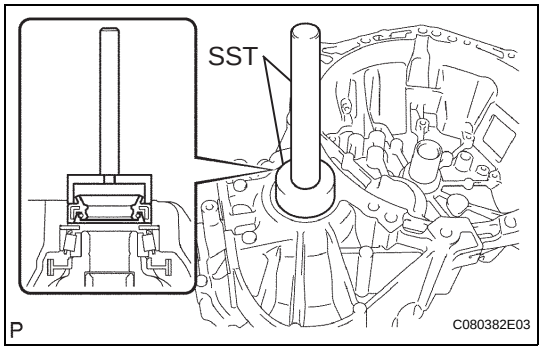

13. INSTALL TRANSAXLE CASE OIL SEAL

(a) Using SST and a hammer, install a new transaxle case oil seal in the transaxle case.
SST 09710-20011 (09710-06071), 09950-70010 (09951-07150)
Drive in depth:
1.6 to 2.2 mm (0.063 to 0.087 in.)

(b) Coat the lip of the transaxle case oil seal with MP grease.

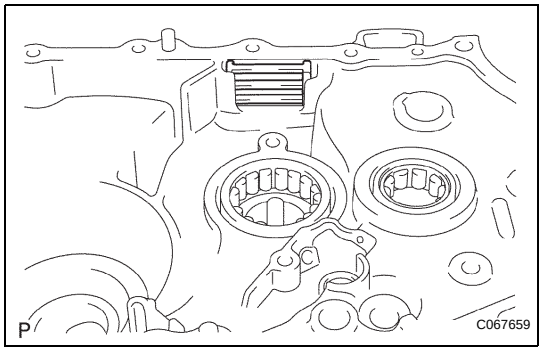

14. INSTALL TRANSMISSION MAGNET

(a) Clean the transmission magnet, and install it to the transmission case.

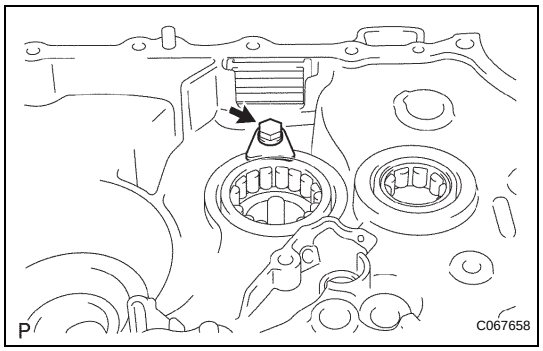

15. INSTALL BEARING LOCK PLATE

(a) Install the bearing lock plate with the bolt.
Torque: 11 N*m (115 kgf*cm, 8 ft.*lbf)

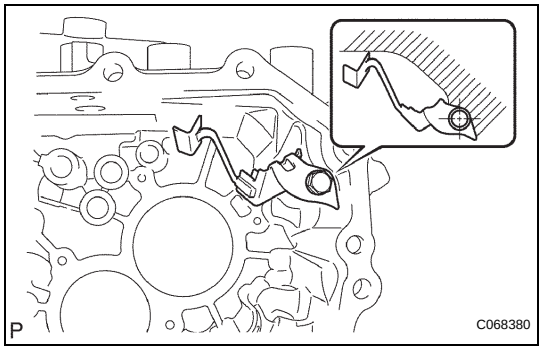

16. INSTALL OIL RECEIVER PIPE NO. 1 (MTM)

(a) Install the oil receiver pipe No. 1 (MTM) with the bolt to the manual transmission case.
Torque: 17 N*m (175 kgf*cm, 13 ft.*lbf)
NOTICE:
- **Prevent the oil receiver pipe No. 1 (MTM) from being deformed.**
- **Install the oil receiver pipe No. 1 (MTM) while placing it against the manual transmission case, as shown in the illustration.**

cardiagn.com

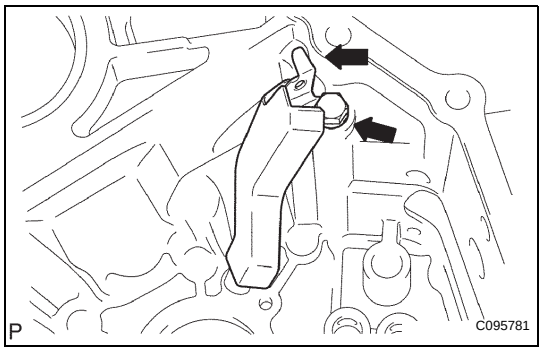

17. INSTALL OIL RECEIVER PIPE NO. 2 (MTM)

(a) Install the oil receiver pipe No. 2 (MTM) with the bolt to the manual transmission case.
Torque: 17 N*m (175 kgf*cm, 13 ft.*lbf)
NOTICE:
- **Prevent the oil receiver pipe No. 2 (MTM) from being deformed.**
- **Install the oil receiver pipe No. 2 (MTM) while placing it against the manual transmission case, as shown in the illustration.**

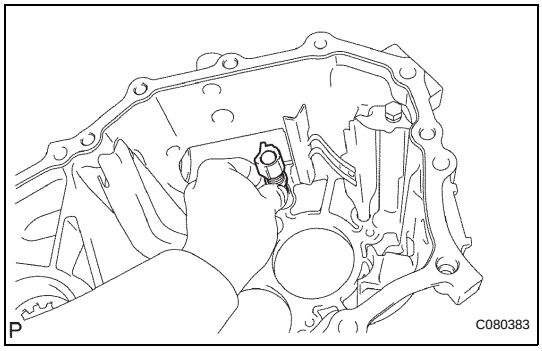

18. INSTALL REVERSE RESTRICT PIN ASSEMBLY

(a) Install the reverse restrict pin assembly to the manual transmission case.
NOTICE:
Do not set the reverse restrict pin assembly in an incorrect orientation.

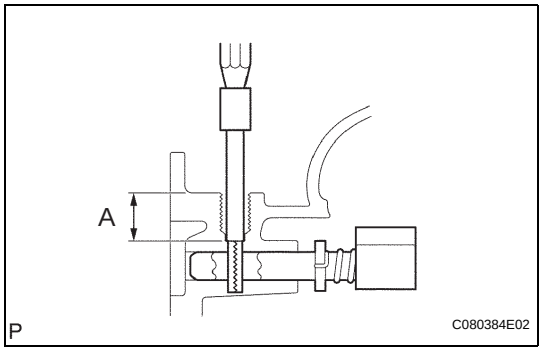

(b) Using a pin punch (ϕ5 mm) and hammer, install the slotted pin to the reverse restrict pin assembly.
Standard clearance (A):
15.5 to 16.5 mm (0.6102 to 0.6496 in.)

(c) Apply sealant to the reverse restrict pin plug.
Sealant:
Toyota Genuine Adhesive 1344, Three Bond 1344 or equivalent

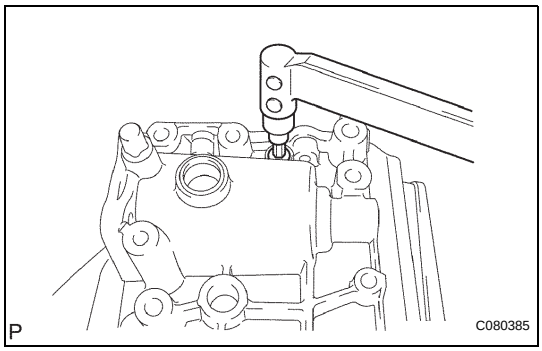

(d) Using a hexagon wrench and a torque wrench, install the reverse restrict pin plug to the manual transmission case.
Torque: 13 N*m (130 kgf*cm, 9 ft.*lbf)

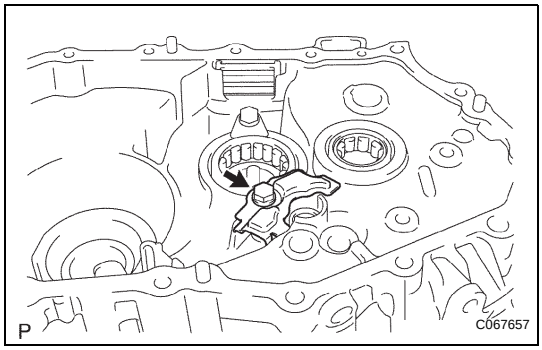

19. INSTALL MANUAL TRANSAXLE CASE RECEIVER

(a) Install the manual transaxle case receiver with the bolt to the transaxle case.
Torque: 11 N*m (115 kgf*cm, 8 ft.*lbf)

cardiagn.com

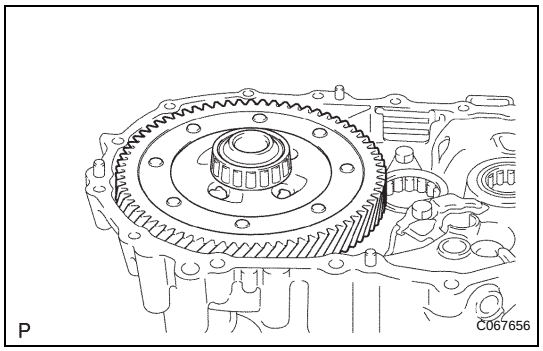

20. INSTALL DIFFERENTIAL CASE ASSEMBLY

(a) Coat the differential case tapered roller bearing with gear oil, and install the differential case assembly to the transaxle case.

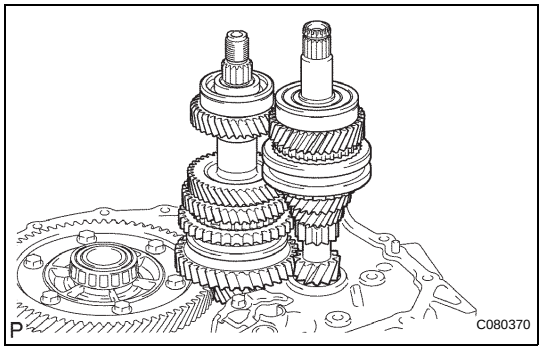

21. INSTALL INPUT SHAFT ASSEMBLY

(a) Coat the sliding and rotating surfaces of the input and output shafts with gear oil, and install them to the transaxle case.

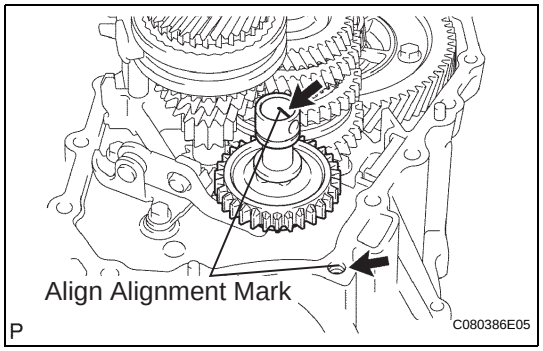

22. INSTALL REVERSE IDLER GEAR SUB-ASSEMBLY

(a) Coat the reverse idler gear sub-assembly, thrust washer and reverse idler gear shaft with gear oil, and install them as shown in the illustration.
HINT:
Align the mark on the reverse idler gear shaft with the bolt hole shown in the illustration.

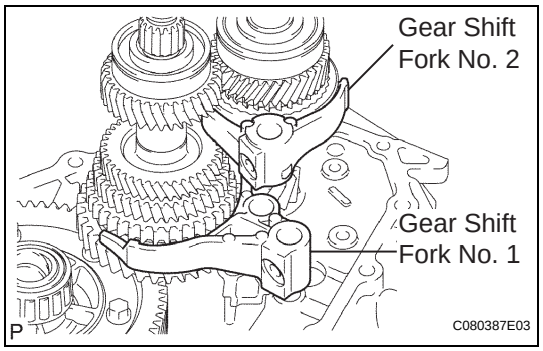

23. INSTALL GEAR SHIFT FORK SHAFT SUB-ASSEMBLY NO. 1

(a) Coat the gear shift fork No. 1 and gear shift fork No. 2 with gear oil, and install them.

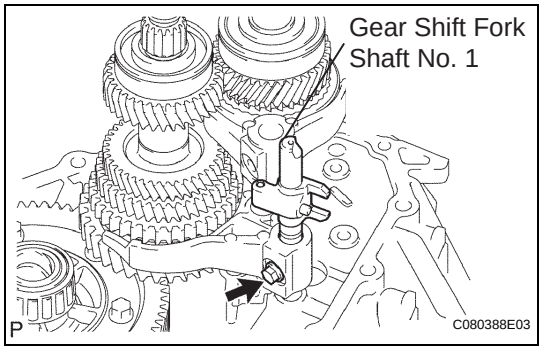

(b) Coat the gear shift fork shaft sub-assembly No. 1 with gear oil, and install it.

(c) Apply sealant to the shift fork lock bolt.
Sealant:
Toyota Genuine Adhesive 1344, Three Bond 1344 or equivalent

(d) Install the gear shift fork lock bolt.
Torque: 16 N*m (160 kgf*cm, 12 ft.*lbf)

Cardiagn.com

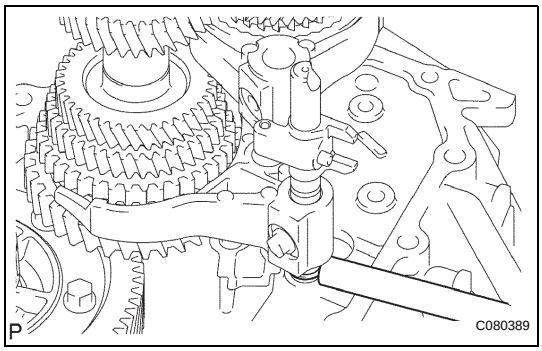

(e) Using a brass bar and a hammer, install the snap ring to the gear shift fork shaft No. 1.

24. INSTALL GEAR SHIFT FORK SHAFT NO. 3

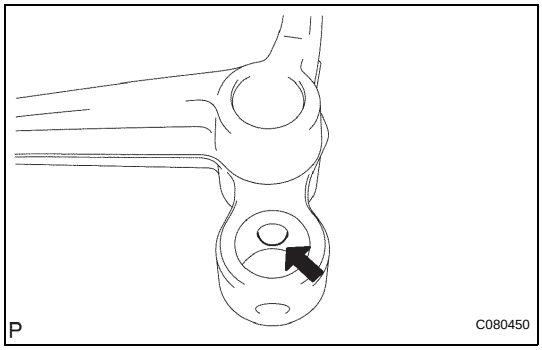

(a) Coat the 2 balls with MP grease, and install them to the reverse shift fork.

(b) Install the reverse shift fork to the gear shift fork shaft No. 3.

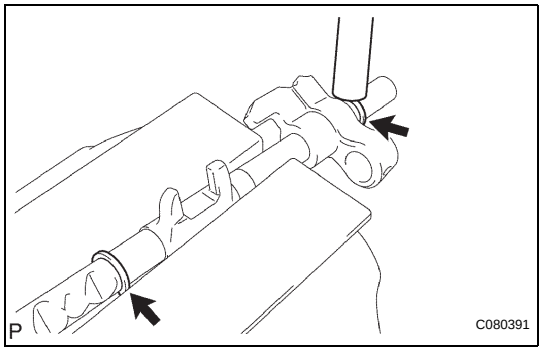

(c) Using a brass bar and a hammer, install the 2 shift fork haft snap rings to the gear shift fork shaft No. 3.

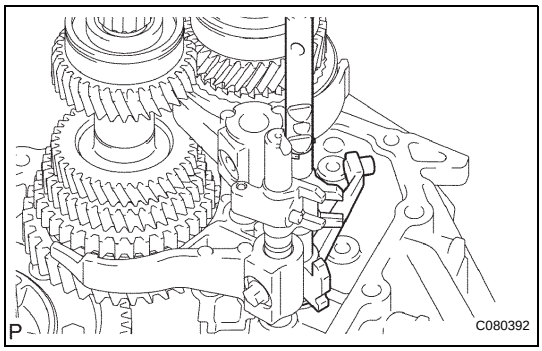

(d) Coat the gear shift fork shaft No. 3 with gear oil, and install it.

MX

cardiagn.com

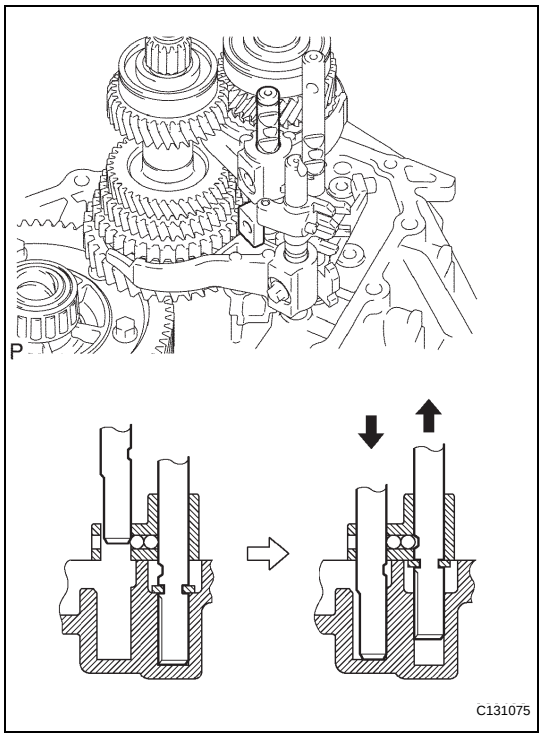

25. INSTALL GEAR SHIFT FORK SHAFT NO. 2

(a) Coat the gear shift head No. 1 and gear shift fork shaft No. 2 with gear oil, and install them.

NOTICE:

To avoid the interference of the 2 shift fork balls, lift up the gear shift fork shaft No. 3 to the position shown in the illustration.

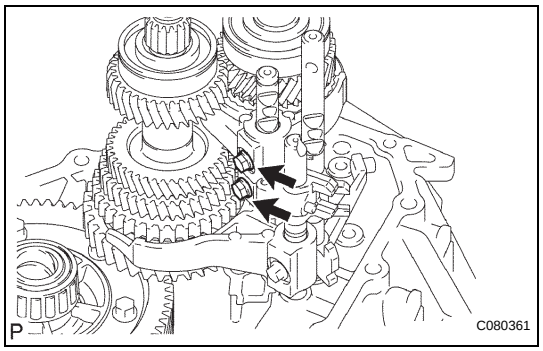

(b) Coat the 2 shift lock bolts with sealant, and install them to the gear shift fork No. 2 and gear shift head No. 1.

Sealant:

Toyota Genuine Adhesive 1344, Three Bond 1344 or equivalent

Torque: 16 N*m (160 kgf*cm, 12 ft.*lbf)

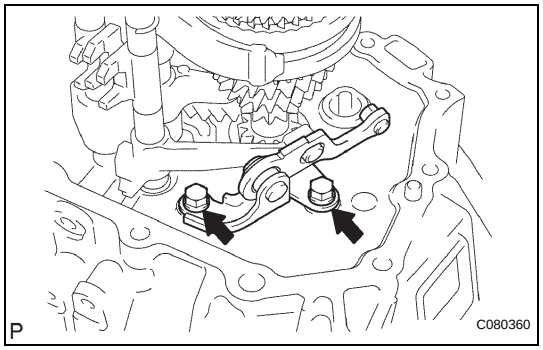

26. INSTALL REVERSE SHIFT ARM BRACKET ASSEMBLY

(a) Install the reverse shift arm bracket assembly with the 2 bolts to the transaxle case.

Torque: 17 N*m (175 kgf*cm, 13 ft.*lbf)

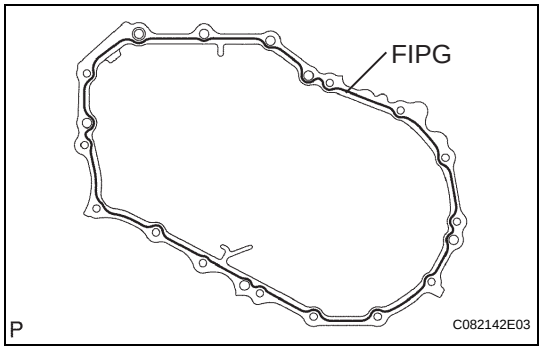

27. INSTALL MANUAL TRANSMISSION CASE

(a) Apply FIPG to the manual transmission case, as shown in the illustration.

FIPG:

Toyota Genuine Seal Packing 1281, Three Bond 1281 or equivalent

NOTICE:

Parts must be assembled within 10 minutes of application. Otherwise, the packing (FIPG) material must be removed and reapplied.

cardiagn.com

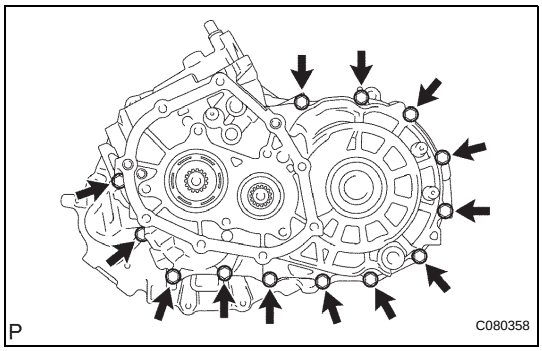

(b) Install the 13 bolts to the manual transmission side.
Torque: 29 N*m (300 kgf*cm, 22 ft.*lbf)

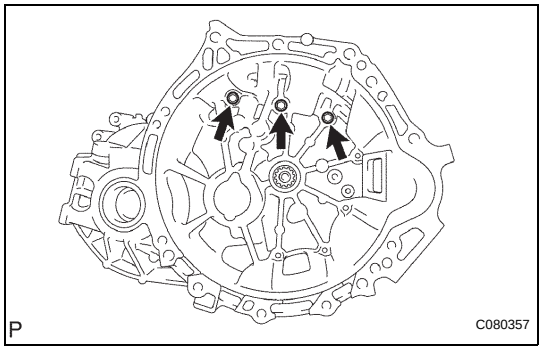

(c) Install the 3 bolts to the transaxle case side.
Torque: 29 N*m (300 kgf*cm, 22 ft.*lbf)

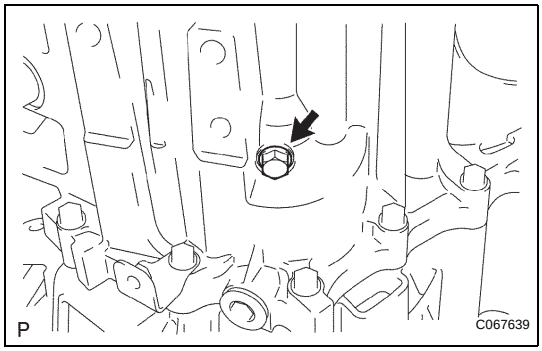

28. INSTALL REVERSE IDLER GEAR SHAFT BOLT

(a) Coat the reverse idler gear shaft bolt with sealant, and install it with a new gasket.
Sealant:
Toyota Genuine Adhesive 1344, Three Bond 1344 or equivalent
Torque: 29 N*m (300 kgf*cm, 22 ft.*lbf)

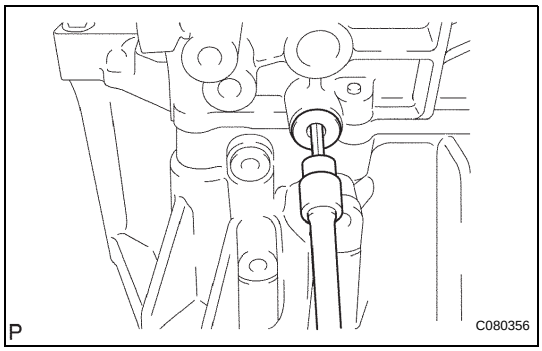

29. INSTALL LOCK BALL ASSEMBLY NO. 1

(a) Coat the lock ball assembly No. 1 with sealant, and install it using a hexagon wrench.
Sealant:
Toyota Genuine Adhesive 1344, Three Bond 1344 or equivalent
Torque: 29 N*m (296 kgf*cm, 21 ft.*lbf)

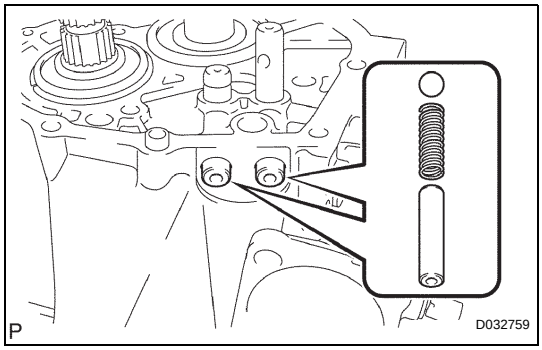

30. INSTALL SHIFT DETENT BALL

(a) Install the 2 shift detent balls, 2 springs, and 2 seats to the manual transmission case.

MX

cardiagn.com

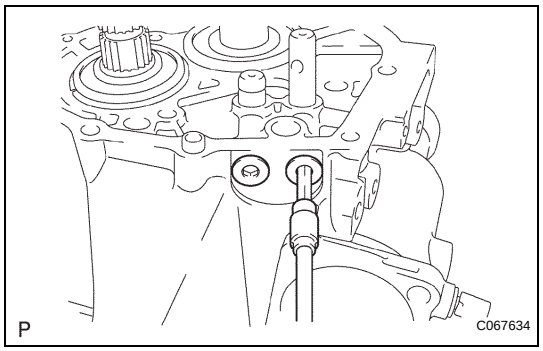

(b) Coat the 2 shift detent ball plugs with sealant, and install them using a hexagon wrench.
Sealant:
Toyota Genuine Adhesive 1344, Three Bond 1344 or equivalent
Torque: 22 N*m (224 kgf*cm, 16 ft.*lbf)

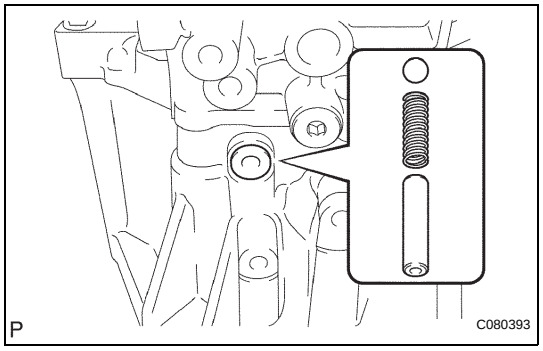

(c) Install the shift detent ball, spring and seat to the transaxle case.

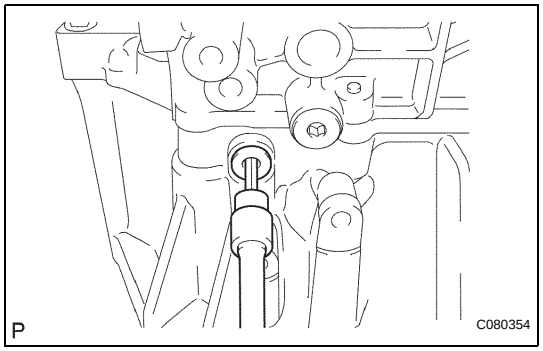

(d) Coat the shift detent ball plug with sealant, and install it using a hexagon wrench.
Sealant:
Toyota Genuine Adhesive 1344, Three Bond 1344 or equivalent
Torque: 22 N*m (224 kgf*cm, 16 ft.*lbf)

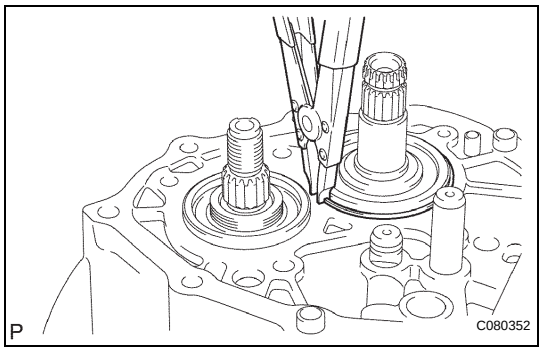

31. INSTALL INPUT SHAFT REAR BEARING HOLE SNAP RING

(a) Using a snap ring expander, install the input shaft rear bearing hole snap ring to the input shaft.

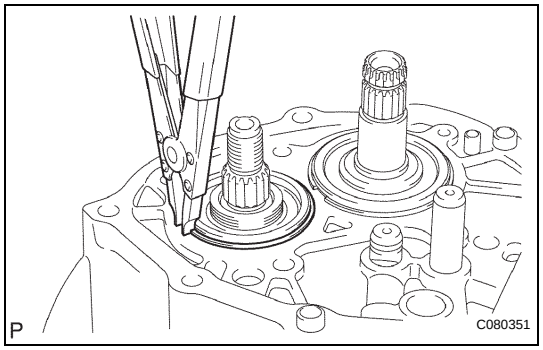

32. INSTALL OUTPUT SHAFT REAR BEARING HOLE SNAP RING

(a) Using a snap ring expander, install the output shaft rear bearing hole snap ring to the output shaft.

cardiagn.com

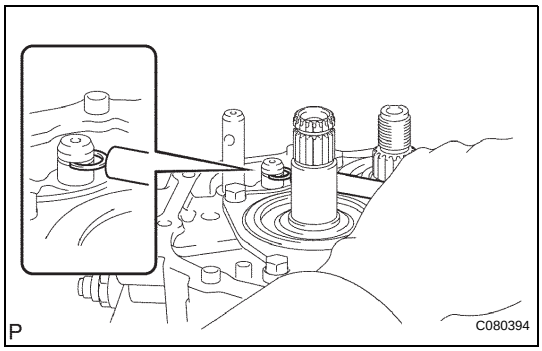

33. INSTALL SHIFT FORK SHAFT SHAFT SNAP RING

(a) Using a brass bar and a hammer, install the shift fork shaft shaft snap ring to the shift fork shaft No. 2.

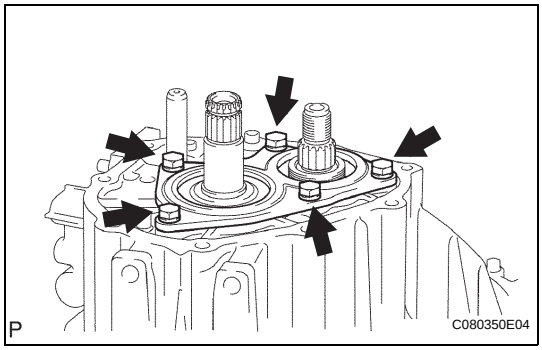

34. INSTALL BEARING RETAINER REAR (MTM)

(a) Coat the 5 bolts with sealant, and install them and bearing retainer rear (MTM) to the manual transmission case.
Torque: 27 N*m (279 kgf*cm, 20 ft.*lbf)

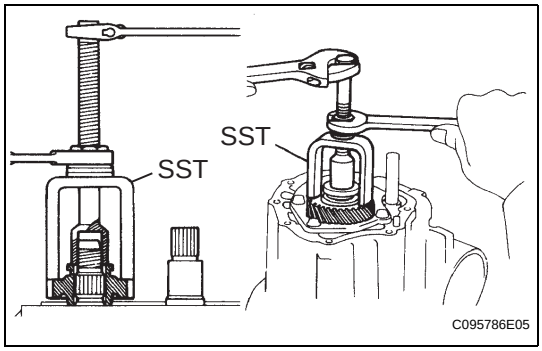

35. INSTALL 5TH DRIVEN GEAR

(a) Using SST, install the 5th driven gear to the output shaft.
SST 09309-12020

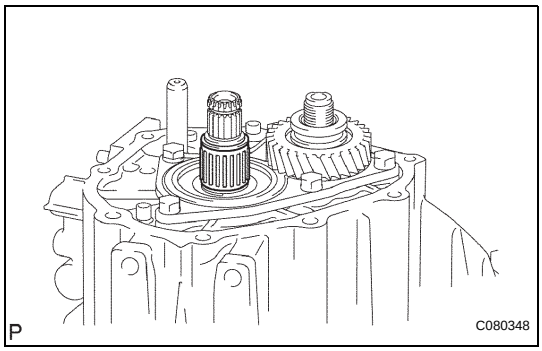

36. INSTALL 5TH GEAR NEEDLE ROLLER BEARING

(a) Coat the 5th gear needle roller bearing and 5th gear bearing spacer with gear oil, and install them to the input shaft.

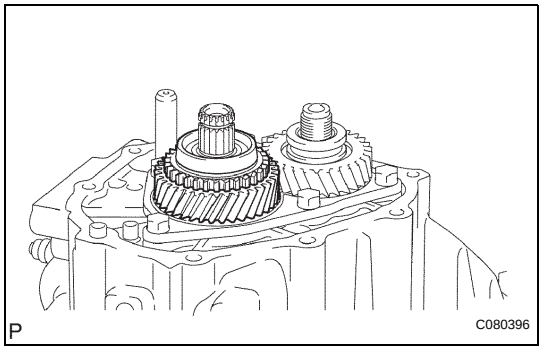

37. INSTALL 5TH GEAR

(a) Coat the 5th gear with gear oil, and install it to the input shaft.

cardiagn.com

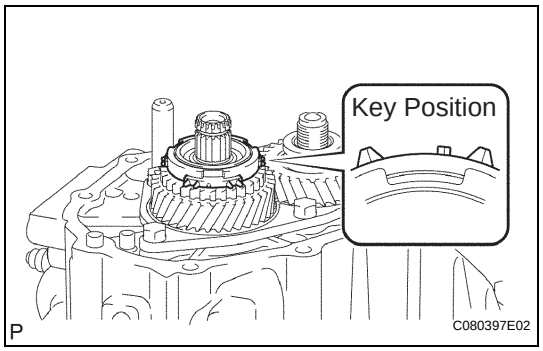

38. INSTALL SYNCHRONIZER RING NO. 3

(a) Coat the synchronizer ring No. 3 with gear oil, and install it to the 5th gear.

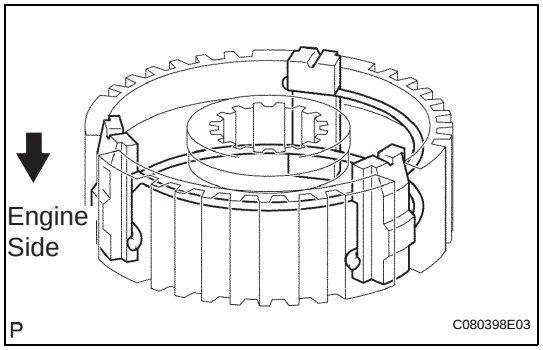

39. INSTALL TRANSMISSION CLUTCH HUB NO. 3

(a) Install the 3 synchromesh shifting keys and 2 synchromesh shifting key springs to the transmission clutch hub No. 3.
HINT:
Do not set the openings of the shifting key springs in the same position.

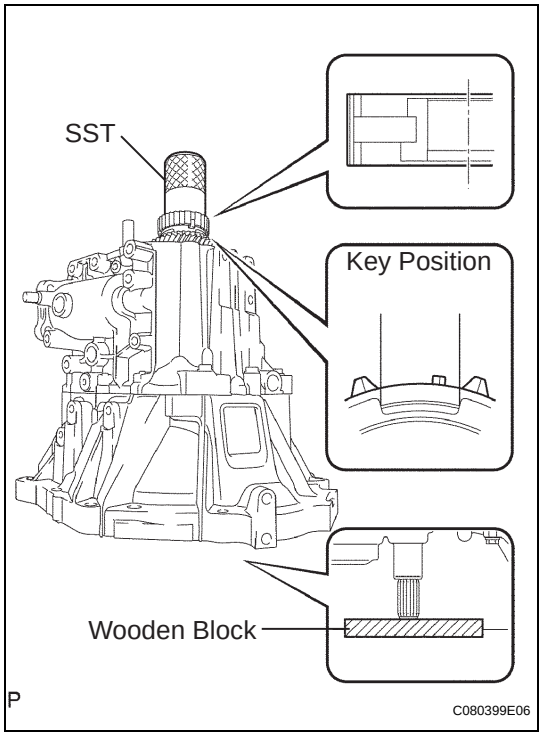

(b) Using SST and a hammer, install the transmission clutch hub No. 3 to the input shaft.
SST 09636-20010
NOTICE:
- **Before driving in the No. 3 clutch hub assembly, place a suitable sized wooden block under the rear side of the input shaft, as shown in the illustration.**
- **When driving it in, fix the input shaft firmly so that it is not pushed downward. Otherwise the input shaft rear bearing is over loaded and might be damaged.**

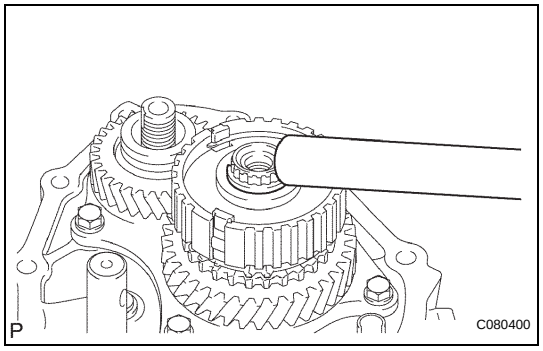

(c) Select a snap ring from the table below that will make the thrust clearance of the transmission clutch hub No. 3 below 0.1 mm (0.004 in.).
Snap ring thickness

Mark	Thickness: mm (in.)	Mark	Thickness: mm (in.)
A	2.25 (0.0886)	E	2.49 (0.0980)
B	2.31 (0.0909)	F	2.55 (0.1004)
C	2.37 (0.0933)	G	2.61 (0.1028)
D	2.43 (0.0957)	-	-

cardiagn.com

(d) Using a brass bar and a hammer, install the snap ring to the input shaft.

40. INSPECT 5TH GEAR THRUST CLEARANCE (See page MX-47)

41. INSPECT 5TH GEAR RADIAL CLEARANCE (See page MX-47)

42. INSTALL GEAR SHIFT FORK NO. 3

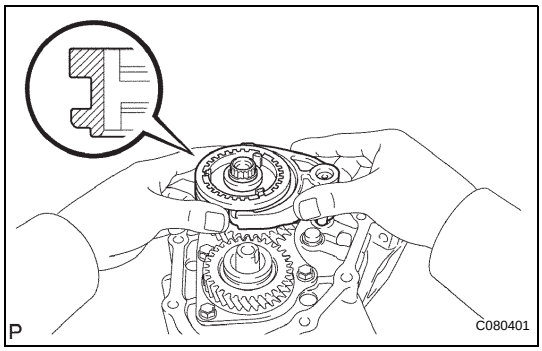

(a) Coat the transmission clutch hub sleeve No. 3 with gear oil, and install it and gear shift fork No. 3 to the transmission clutch hub No. 3.
HINT:
Do not set the transmission clutch hub No. 3 in an incorrect orientation.

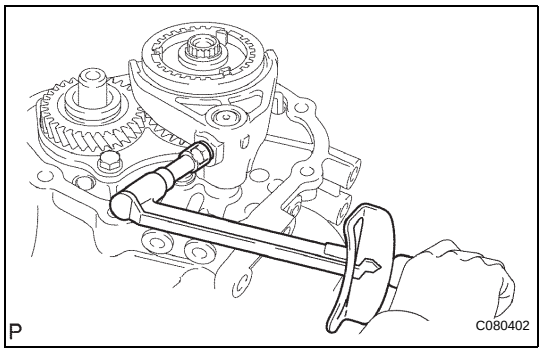

(b) Coat the gear shift lock fork ball with sealant, and install it to the gear shift fork No. 3.
Sealant:
Toyota Genuine Adhesive 1344, Three Bond 1344 or equivalent
Torque: 16 N*m (160 kgf*cm, 12 ft.*lbf)

43. INSTALL MANUAL TRANSMISSION OUTPUT SHAFT REAR SET NUT

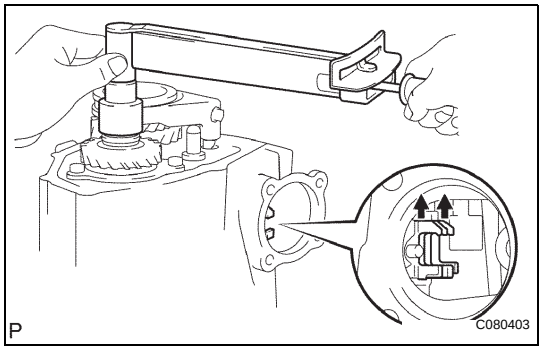

(a) Engage two gears simultaneously to lock the transmission.
(b) Install a new manual transmission output shaft rear set nut.
Torque: 118 N*m (1,200 kgf*cm, 87 ft.*lbf)

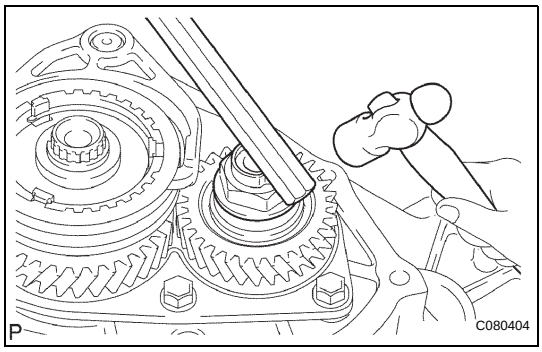

(c) Using a chisel and a hammer, stake the manual transmission output shaft rear set nut.
(d) Disengage the two gears.

MX

cardiagn.com

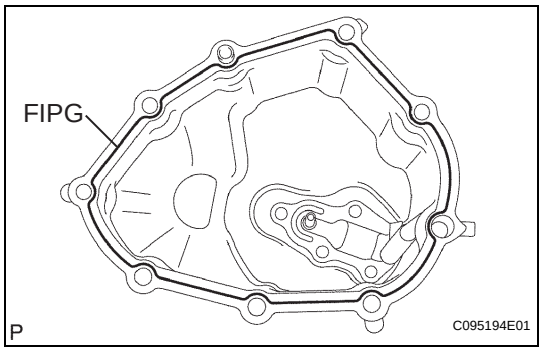

44. INSTALL MANUAL TRANSMISSION CASE COVER SUB-ASSEMBLY

(a) Apply FIPG to the manual transmission case cover sub-assembly as shown in the illustration.
FIPG:
Toyota Genuine Seal Packing 1281, Three Bond 1281 or equivalent
NOTICE:
Parts must be assembled within 10 minutes of application. Otherwise, the packing (FIPG) material must be removed and reapplied.

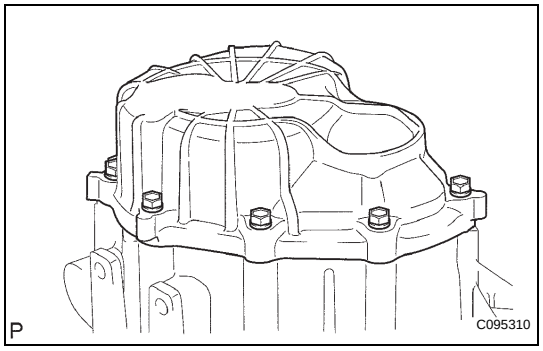

(b) Install the manual transmission case cover sub-assembly with the 9 bolts to the manual transmission case.
Torque: 18 N*m (185 kgf*cm, 13 ft.*lbf)

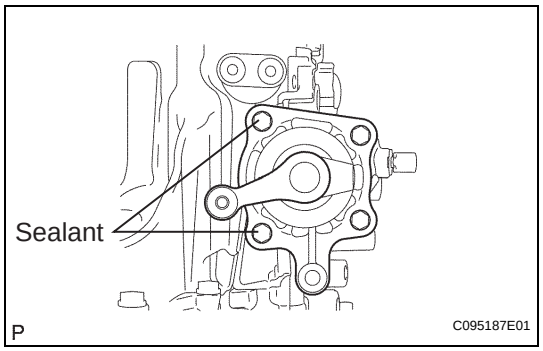

45. INSTALL SHIFT AND SELECT LEVER SHAFT ASSEMBLY

(a) Coat the 2 bolts with sealant, and install them, 2 bolts, a new gasket and the shift & select lever shaft assembly to the manual transmission case.
Sealant:
Toyota Genuine Adhesive 1344, Three Bond 1344 or equivalent
Torque: 20 N*m (200 kgf*cm, 14 ft.*lbf)
NOTICE:
Set the claws of the shift interlock plate into the shift head part of the gear shift fork shaft securely.

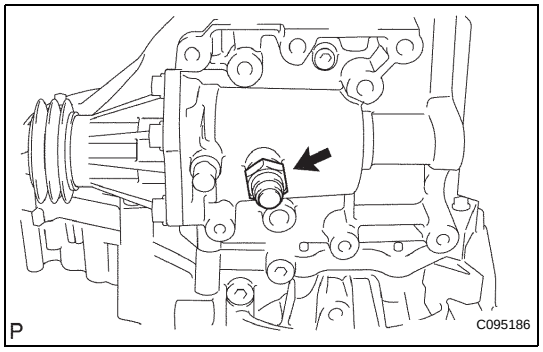

46. INSTALL LOCK BALL ASSEMBLY NO. 1

(a) Coat the lock ball assembly No. 1 with sealant, and install it to the manual transmission case.
Sealant:
Toyota Genuine Adhesive 1344, Three Bond 1344 or equivalent
Torque: 29 N*m (300 kgf*cm, 22 ft.*lbf)

cardiagn.com

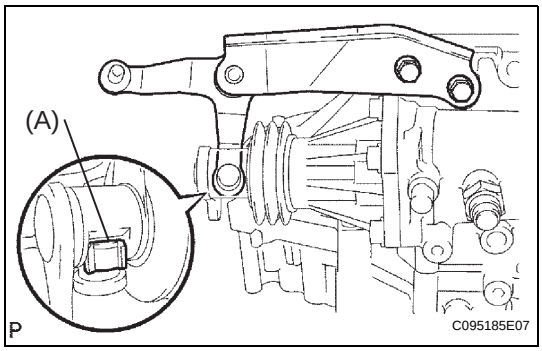

47. INSTALL SELECTING BELL CRANK ASSEMBLY

(a) Install the selecting bell crank assembly and the control shift lever bush with the 2 bolts to the manual transmission case.
Torque: 25 N*m (250 kgf*cm, 18 ft.*lbf)
NOTICE:
Apply MP grease to the inside circumferential surface of the control shift lever bush (A).

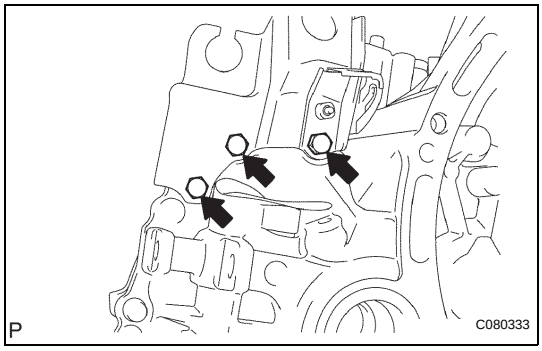

48. INSTALL FLOOR SHIFT CONTROL LEVER HOUSING SUPPORT BRACKET

(a) Install the floor shift control lever housing support bracket with the 3 bolts to the transaxle case.
Torque: 18 N*m (184 kgf*cm, 13. ft.*lbf)

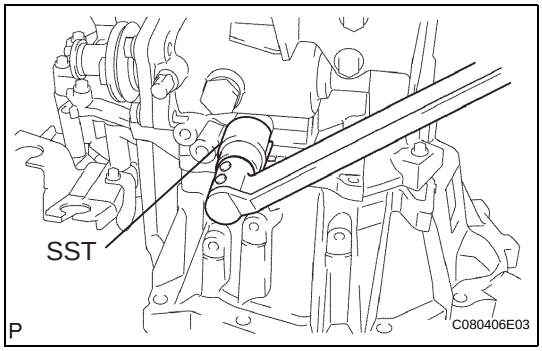

49. INSTALL BACK UP LIGHT SWITCH ASSEMBLY

(a) Using SST, install the back up light switch assembly with a new gasket to the manual transmission case.
Torque: 40 N*m (411 kgf*cm, 30 ft.*lbf)
SST 09817-16011

50. INSTALL SPEEDOMETER DRIVEN HOLE COVER SUB-ASSEMBLY

(a) Install a new O-ring to the speedometer driver hole cover sub-assembly.
(b) Install the speedometer driver hole cover sub-assembly with the bolt.
Torque: 11 N*m (115 kgf*cm, 8 ft.*lbf)

51. INSTALL SPEEDOMETER SENSOR

(a) Install a new O-ring to the speedometer sensor.
(b) Install the speedometer sensor with the bolt.
Torque: 11 N*m (115 kgf*cm, 8 ft.*lbf)

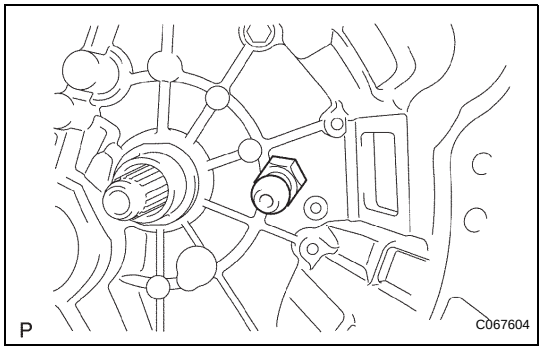

52. INSTALL RELEASE FORK SUPPORT

(a) Install the clutch release fork support to the transaxle case.
Torque: 37 N*m (375 kgf*cm, 27 ft.*lbf)

cardiagn.com

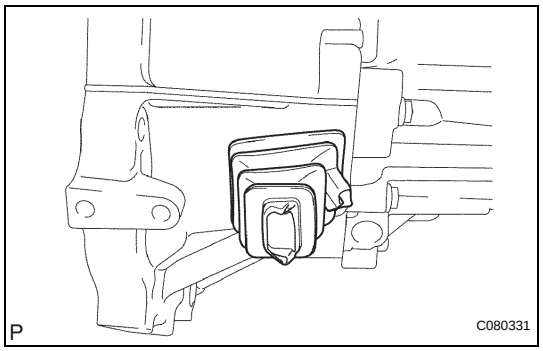

53. INSTALL CLUTCH RELEASE FORK BOOT

(a) Install the clutch release fork boot to the transaxle case.

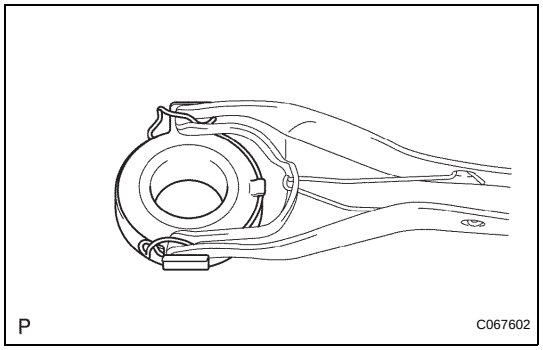

54. INSTALL CLUTCH RELEASE BEARING ASSEMBLY

(a) Coat the clutch release bearing assembly with release hub grease, and install it to the clutch release fork sub-assembly with the release bearing clip.

Grease:

Toyota Genuine Release Hub Grease or equivalent

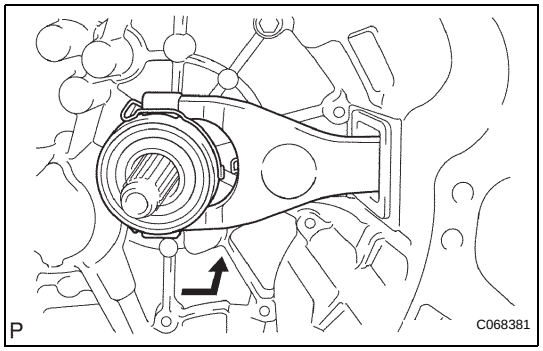

55. INSTALL CLUTCH RELEASE FORK SUB-ASSEMBLY

(a) Install the clutch release fork sub-assembly to the input shaft.

(b) Apply clutch spline grease to the spline of the input shaft.

Grease:

Toyota Genuine Clutch Spline Grease or equivalent

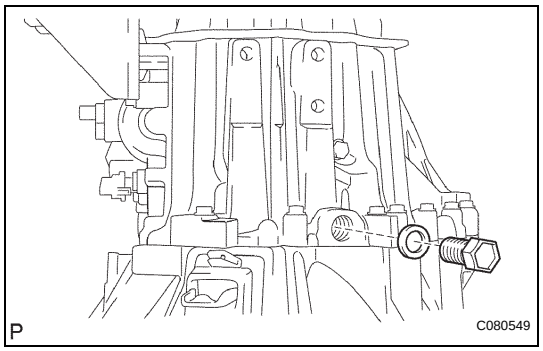

56. INSTALL MANUAL TRANSMISSION FILLER PLUG

(a) Install the manual transmission filler plug with a new gasket.

Torque: 39 N*m (400 kgf*cm, 29 ft.*lbf)

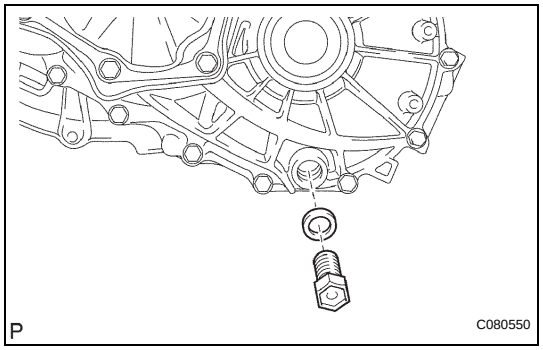

57. INSTALL DRAIN (MTM) PLUG SUB-ASSEMBLY

(a) Install the drain (MTM) plug sub-assembly with a new gasket.

Torque: 39 N*m (400 kgf*cm, 29 ft.*lbf)

cardiagn.com